www.oklab.com

REVISION				
SYM	DESCRIPTION	DATE	WRIT	APPR
A	New Release	30DEC2019	XIANG	ERIC

Connector Specification

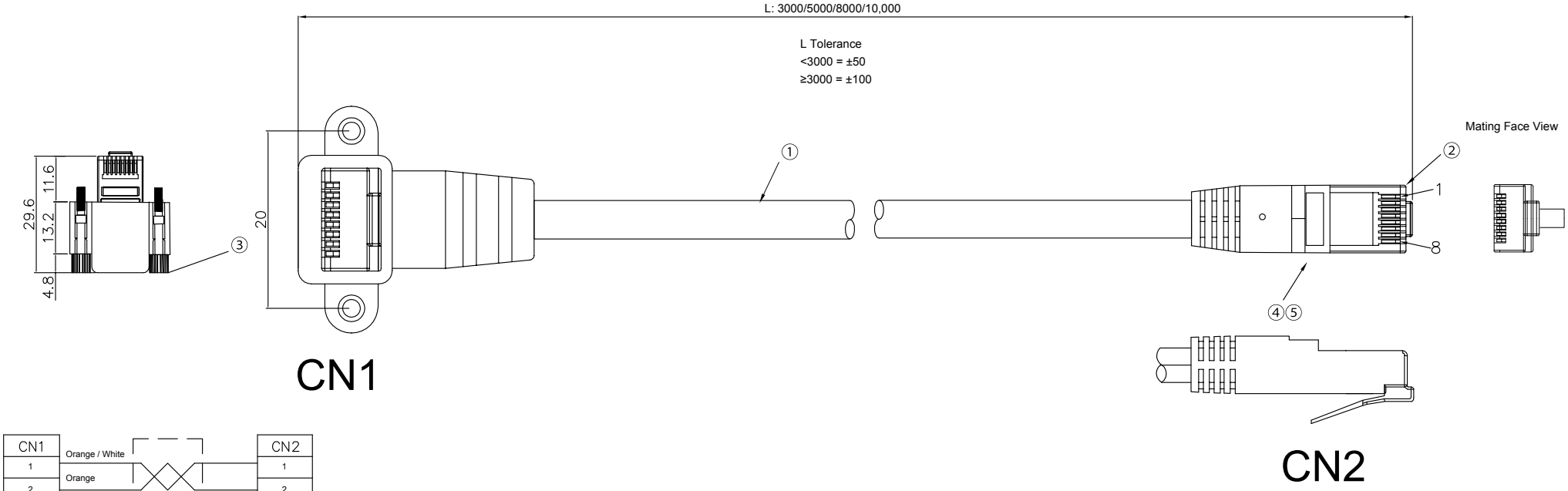

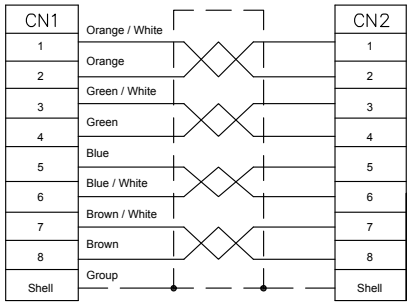

Notes:

1. The specification on the drawing must be completely followed for final finished products.
2. Test:
   Tonduction: no short-circuit, open circuit, false matching
   Tithstand voltage: AC500V/2MA/1second
   Insulation: DC: 500V/100MΩ/second
   Instant Break: 3second
3. No Contaminationt, Damage, Scratch, Deformation.

Item	Description	QTY	Specification
①	Wire	1	GIGE CABLE CAT5E BLACK LF 4PX26AWG
②	RJ45 Connector	2	8P8C
③	Screw Rod	2	M2.0*0.4 4.75
④	Inner Mold	1	PE(J5019)
⑤	Outer Mold	1	DWHC-10035(Black)

Unless otherwise specifie dimernsions are in milli-meters. Tolerances on the right.			Dim Tolerances x. ±5 .x ±0.3	Angle Tolerances x.° ±1° .x° ±
Drawn Y.D.MO	Date 30DEC2019	Material See Table	Unit MM	Title GigE Cat5E with RJ-45 90° Up Horizontal Screws High Flex Cable
Checked Z.G.XIANG	Date 30DEC2019	Finish See Table	Scale /	Model NO. OLA-GIGE-7-1-2-XM
Approved ERIC	Date 30DEC2019	It must not be copied or otherwise disclosed without prior written consent. This document is the property of OKLAB.		

www.oklab.com

Cable Specification

Drawing

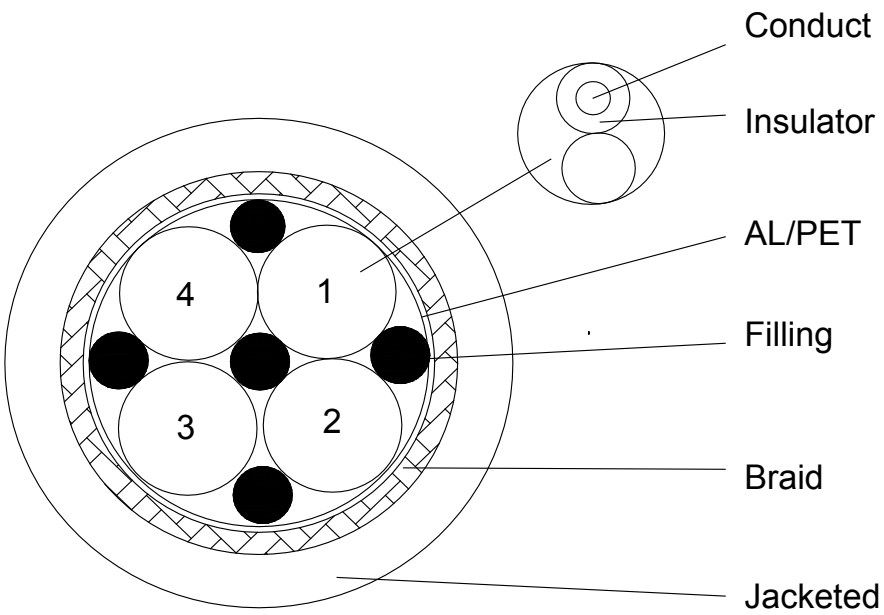

NO.	Insulator Colour 1	Insulator Colour 2
1	Blue	Blue / White
2	Orange	Orange / White
3	Green	Green / White
4	Brown	Brown / White

Blue / White: White line is injected on the blue insulator and occupys 20-25% of the dimension.
The same for others.

Model NO.	OLA-GIGE-7-1-2-XM CABLE	Established Date	15NOV2018
Style	GIGE Ethernet/T/20276-SB BLACK LF 4PX26AWG		
Size	4PX26AWG		
Approbation	UL20276 AWM 80°C 30V	Flame Retardant Grade: VW-1	
Conductor	Size	26AWG/4P	
	Cond. Material	Bare Copper BC	
	Construction	30/0.08 BC	
	Diameter	0.51mm	
	Tolern	±0.003mm	
Insulation	Material	HDPE	
	Avg.Thick.	0.207mm	
	Min.Thick.	0.184mm	
	Diameter	0.97±0.05mm	
	Colour	(Bule*Bule/White) (Orange*Orange/White) (Green*Green/White) (Brown*Brown/White)	
Pair Twist	Pair Twist	1P*26AWG	
	Diameter	1.94mm	
Assembly Standed		26AWG/4P	
Shielded	Al/Pet	0.05*20mm	
	Braid	24/8/0.1TC	
	Covered	99% Min	
Jacketed	Material	PVC	
	Avg.Thick.	0.765mm	
	Min.Thick.	0.723mm	
	Diameter	ø6.5±0.2mm	
	Colour	Black (Similar to RAL 9005)	
Electrical Properties	Conductor Resistance	≤124 Ω/km 20°C	
	Test Voltage	500V/1min	
	Insulating Resistance	> 10 MΩ/km 20°C	
	Characteristic Impedance	100±15Ω	
Wokring Tempearture	Fixed Installation	-20°C ~ 80°C	
	Moved Installation	-5°C ~ 50°C	
Minimal Bending Radius	Fixed Installation	5 X Cable-ø	
	Moved Installation	8.5 X Cable-ø	
Printing	Ethernet, 4PX26AWG, 80°C, 30V, VW-1, LF		

Cable Vertical Fire Resistance Test Report

Item NO.: GIGE Ethernet/T/20276-SB BLACK LF 4PX26AWG

Temperature/Humidity: 25°C / 30%

Test Date: 12FEB2018

Item	Test Conditions	Standard of Criterion	Test Records(Second)								Test Results	Notes
			Cables NO.	Residual Flame 1	Residual Flame 2	Residual Flame 3	Residual Flame 4	Residual Flame 5	Burning Area of Flag %	Igniting of Cotton Layer		
VW-1	• Flame: Inner flame 40mm, outer flame 125mm, the flame tube forms an angle of 20 degree to the horizontal plane. • Flag: The 13mm flag is 250mm above the intersection of the inner and outer flame. • Combustion: Single combustion for 15 second and interval 15s as a cycle, 5 cycles are repeated.	• A single residual flame does not exceed 60 seconds. • No falling ignites absorbent cotton. • The burning area of flag does not exceed 25%.	(1)	8	7	6	6	7	0%	Not Ignited	Not Ignited	
			(2)	4	9	10	6	5	0%	Not Ignited		
			(3)	10	11	9	10	13	0%	Not Ignited		

Test Results: Not Ignited, passed.

Tested	L.S.Yang
Checked	L.S.Yang
Approved	C.Gan

Cable Drag Chain Test Report

Item NO.: GIGE Ethernet/T/20276-SB BLACK LF 4PX26AWG
Outer Diameter: 6.5±0.3mm
Temperature/Humidity: 10°C-30°C / 40%H

Test Date: 13Nov2017-12DEC2018

Test Conditions		Test Instrument	CO2
Cable bending coefficient	9xd	Target number of test round trips	20 Million Times
Cable bending radius	60mm		
Stroke	1,000mm		
Speed	60 Sound trips/min		
Acceleration and deceleration	Around 4m/s		

Cables NO. / Item NO.	(1)	(2)	(3)	(4)	(5)	(6)	Avg
Ethernet/T/20276-SB BLACK LF 4PX26AWG	20,004,325	20,004,325	20,004,325	20,004,325	20,004,325		20,004,325

Test Results: No disconnection, passed.
Reach the target test times, stop the test.

Tested	Z.M.L
Checked	H.W.Z
Approved	H.Y.W

Cable Torsion Test Report

Item NO.: GIGE Ethernet/T/20276-SB BLACK LF 4PX26AWG
Outer Diameter: 6.5±0.3mm
Temperature/Humidity: 10°C-30°C / 40%H

Test Date: 04Jan2019-06Jan2019

Test Conditions		Test Instrument	YOUER, OUT
Torsion Angle	±180°	Target Number of Test Round Trips	50K Times
Test Length	500mm		
Speed	40 Rround trips/min		

Cables NO. / Item NO.	(1)	(2)	(3)	(4)	(5)	(6)	Avg
Ethernet/T/20276-SB BLACK LF 4PX26AWG	50,000	50,000	50,000	50,000	50,000		50,000

Test Results: No disconnection, passed.
Reach the target test times, stop the test.

Tested	Z.M.L
Checked	H.W.Z
Approved	H.Y.W

Cable Flexing Test Report

Item NO.: GIGE Ethernet/T/20276-SB BLACK LF 4PX26AWG
Outer Diameter: 6.5±0.3mm
Temperature/Humidity: 10°C-30°C / 40%H

Test Date: 06JUL2018-13OCT2018

Test Conditions		Test Instrument	Y01
Bending Speed	60 Times/min	Target Number of Test Round Trips	100K Times
Bending Angle	±90°		
Bending Radius	60mm		
Load	500g		

Item NO. \ Cables NO.	(1)	(2)	(3)	(4)	(5)	(6)	Avg
Ethernet/T/20276-SB BLACK LF 4PX26AWG	101,326	101,326	101,326	101,326	101,326		101,326

Test Results: No disconnection, passed.
Reach the target test times, stop the test.

Tested	Z.M.L
Checked	H.W.Z
Approved	H.Y.W

LINKWARE™ PC
CABLE TEST MANAGEMENT SOFTWARE

Cable ID: 192

Data / Time: 06/13/2019 04:50:56 PM
Headroom 4.1 dB (NEXT 45-78)
Test Limit: TIA Cat 5e Channel
Cable Type: Cat 5e F/UTP
NVP: 69.0%

Software Version: V6.0 Build 6
Limits Version: V7.0
Calibration Date:
Main (Tester): 04/11/2019
Remote (Tester): 04/11/2019

Test Summary: PASS

Model: DSX-5000
Main S/N: 18310305
Remote S/N: 18310304
Main Adapter: DSX-CHA004
Remote Adapter: DSX-CHA004

Length (m), Limit 100.0	[Pair 45]	66.0
Prop. Delay (ns), Limit 555	[Pair 78]	330
Delay Skew (ns), Limit 50	[Pair 78]	11
Resistance (ohms)	[Pair 12]	14.96
Insertion Loss Margin (dB)	[Pair 12]	2.2
Frequency (MHz)	[Pair 12]	100.0
Limit (dB)	[Pair 12]	24.0

66.0 m

Wire Map (T568B)
PASS

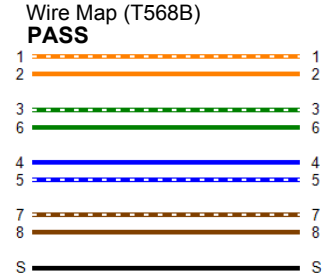

	Worst Case Margin		Worst Case Value	
PASS	MAIN	SR	MAIN	SR
Worst Pair	36-45	45-78	45-78	45-78
NEST (dB)	6.5	4.1	9.8	6.3
Freq. (MHz)	10.1	7.8	100.0	74.3
Limit (dB)	46.9	48.8	30.1	32.3
Worst Pair	45	45	45	45
PS NEST (dB)	6.9	6.5	9.5	7.3
Freq. (MHz)	10.1	7.9	100.0	66.8
Limit (dB)	43.9	45.7	27.1	30.1

PASS	MAIN	SR	MAIN	SR
Worst Pair	45-12	45-12	45-78	45-78
ACR-F (dB)	13.2	13.2	19.8	19.7
Freq. (MHz)	6.3	6.1	100.0	96.5
Limit (dB)	41.5	41.7	17.4	17.7
Worst Pair	45	45	78	45
PS ACR-F (dB)	16.1	16.0	22.4	22.4
Freq. (MHz)	6.1	6.3	100.0	100.0
Limit (dB)	38.7	38.5	14.4	14.4

N/A	MAIN	SR	MAIN	SR
Worst Pair	36-45	45-78	45-78	12-45
ACR-N (dB)	7.2	4.6	12.2	12.4
Freq. (MHz)	10.1	7.6	100.0	96.8
Limit (dB)	39.8	42.8	6.1	6.7
Worst Pair	45	45	45	45
PS ACR-N (dB)	7.6	7.2	12.7	13.3
Freq. (MHz)	10.1	7.8	100.0	96.8
Limit (dB)	36.8	39.6	3.1	3.7

PASS	MAIN	SR	MAIN	SR
Worst Pair	45	36	45	36
RL (dB)	6.5	7.7	6.5	7.7
Freq. (MHz)	3.8	3.8	3.8	3.8
Limit (dB)	17.0	17.0	17.0	17.0

Compliant Network Standards:

10BASE-T	100BASE-TX	100BASE-T4
1000BASE-T	2.5GBASE-T	ATM-25
ATM-51	ATM-155	100VG-AnyLan
TR-4	TR-16 Active	TR-16 Passive

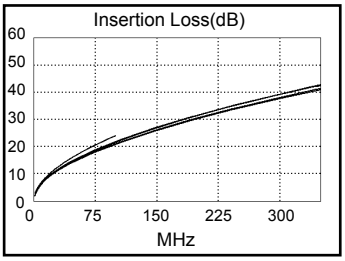

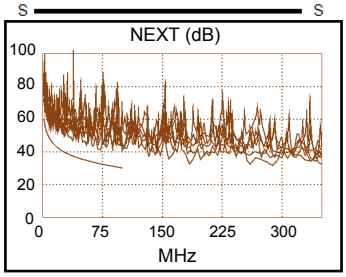

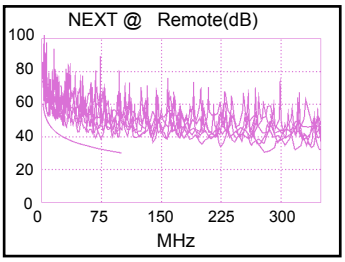

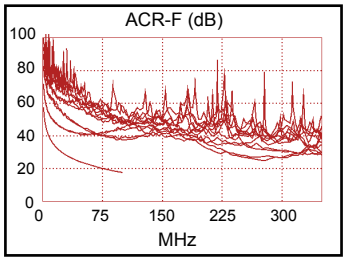

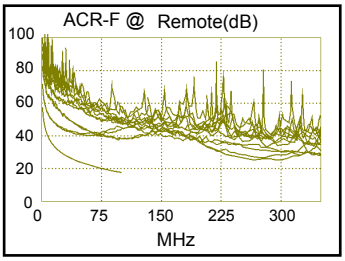

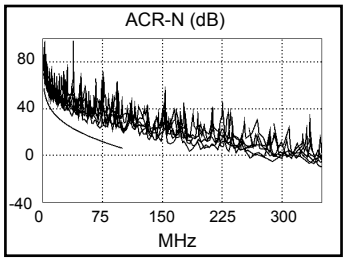

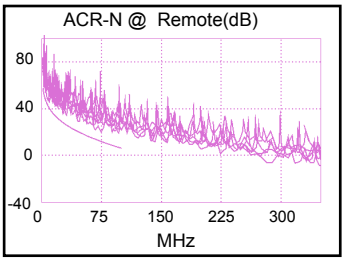

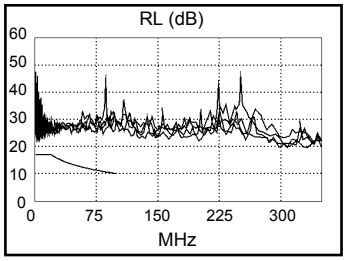

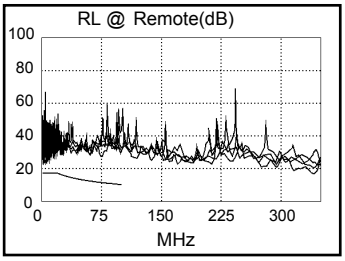

LinkWare™ PC Version 10.0

FLUKE networks