COOLENS®

DTCA35F-82C-M58-AL

High Performance Industrial Lens

- DTCA series lenses are designed specially for compatibility with large sensor.
- Support newest developments in machine vision field: 24K line scan camera and 150Mp area scan camera.
- Extreme imaging aperture, extraordinary aberration correction, diffraction limited imaging resolution.
- Big aperture, good telecentricity, near zero distortion, big depth for high quality imaging.

Optical Specifications	
Magnification (x)	0.53
Object Field of View (Φmm)	82
Working Distance (mm)	338±4
Max Sensor Size (Φmm)	43.4
Best Aperture (F/#)	10
Telecentricity typical (max) (deg)	<0.1
Distortion typical (max) (%)	<0.1
MTF30 (lp/mm)	>92
Depth of Field (mm)	±1.4@F10
Length of I/O (mm)	814±4

Field of View (mm × mm)	
CMV50000(36.43x27.62)	68.7x52.1
KAI29050/2(36.17x24.11)	68.2x45.5
KAI43142(36.18x24.12)	68.3x45.5
Mechanical Specifications	
Mount	M58
Length (mm)	464.4
Weight (kg)	3.8
Coaxial Light	Yes
Iris	No

Notes:

1. Depth of Field is calculated value, this value could be used for imaging test, but to get sharp image in application, half of calculated value is suggested.
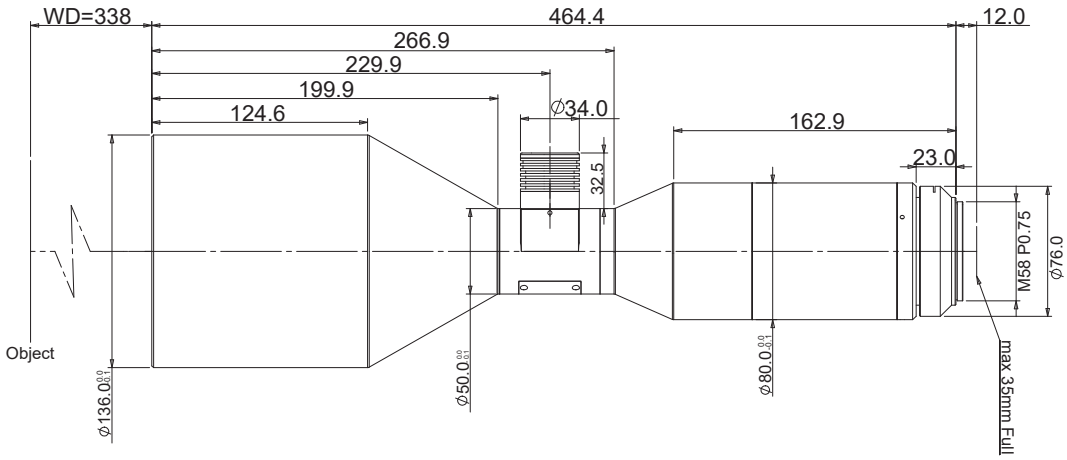
2. Length of I/O = WD + Length + Back Focal Length.