COOLENS®

DTCM110-110-AL

C-mount Bi-telecentric Lens

- Optimized for 1/2.5"~1.1" C-Mount cameras;
- Largest FOV from 26mm upto 300mm;
- Excellent resolution for high pixel cameras;
- Low distortion, good telecentricity, big aperture and big depth of field for high end application.

Optical Specifications	
Magnification (x)	0.151
Object Field of View (Φmm)	110
Working Distance (mm)	263±4
Max Sensor Size (Φmm)	16.6(1")
Best Aperture (F/#)	6.5
Telecentricity typical (max) (deg)	<0.1
Distortion typical (max) (%)	<0.1
MTF30 (lp/mm)	>140
Depth of Field (mm)	±28.1@F16
Length of I/O (mm)	569±4

Field of View (mm × mm)	
1" PYTHON 5000(12.43x9.83)	82.3x65.1
1" IMX255(14.19x7.51)	94.0x49.7
1" IMX183(13.13x8.76)	87.0x58.0
Mechanical Specifications	
Mount	C
Length (mm)	288.1
Weight (kg)	2.8

Compatible Lighting	
Telecentric LED Lighting	DTCL-110-xW-y
	Beam Diameter 110mm

Notes:

1. Depth of Field is calculated value, this value could be used for imaging test, but to get sharp image in application, half of calculated value is suggested.
2. Length of I/O = WD + Length + Back Focal Length.

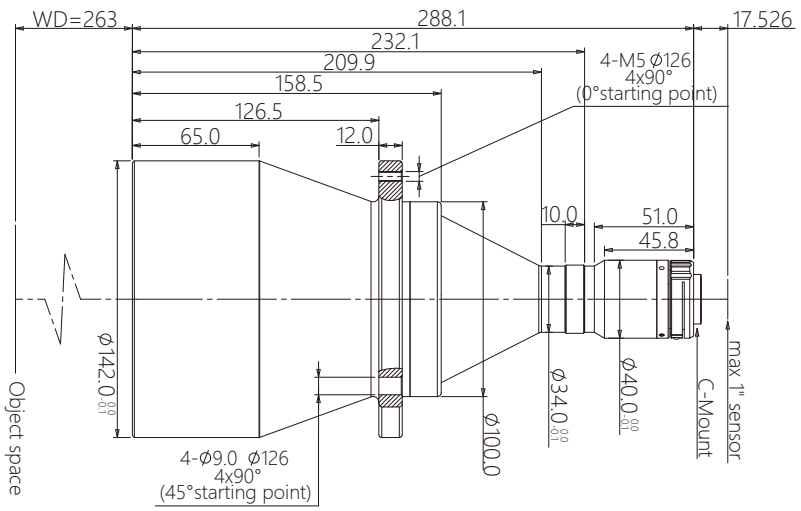

oklab

www.oklab.com