# DTCM71M-136-M58-AL

## Large Format Bi-telecentric Lens

- Optimized for 4/3"~44mm M-mount or other mount cameras;
- FOV from 26mm upto 300mm;
- High resolution, low distortion and homogeneous image quality;
- Full test report for each units are provided;
- Customized mounts available.

| Optical Specifications | |
|---|---|
| Magnification (x) | 0.287 |
| Object Field of View (Φmm) | 136 |
| Working Distance (mm) | 288±5 |
| Max Sensor Size (Φmm) | 39 |
| Best Aperture (F/#) | 7.1 |
| Telecentricity typical (max) (deg) | <0.1 |
| Distortion typical (max) (%) | <0.1 |
| MTF30 (lp/mm) | >120 |
| Depth of Field (mm) | ±7.8@F16 |
| Length of I/O (mm) | 758±5 |

| Field of View (mm × mm) | |
|---|---|
| CHR 70M (31.0x21.7) | 108.0x75.6 |
| **Mechanical Specifications** | |
| Mount | M58 or other |
| Length (mm) | 457.8 |
| Weight (kg) | 4.8 |
| **Compatible Lighting** | |
| Telecentric LED Lighting | DTCL-136-xW-y |
| | Beam Diameter 136mm |

Notes:
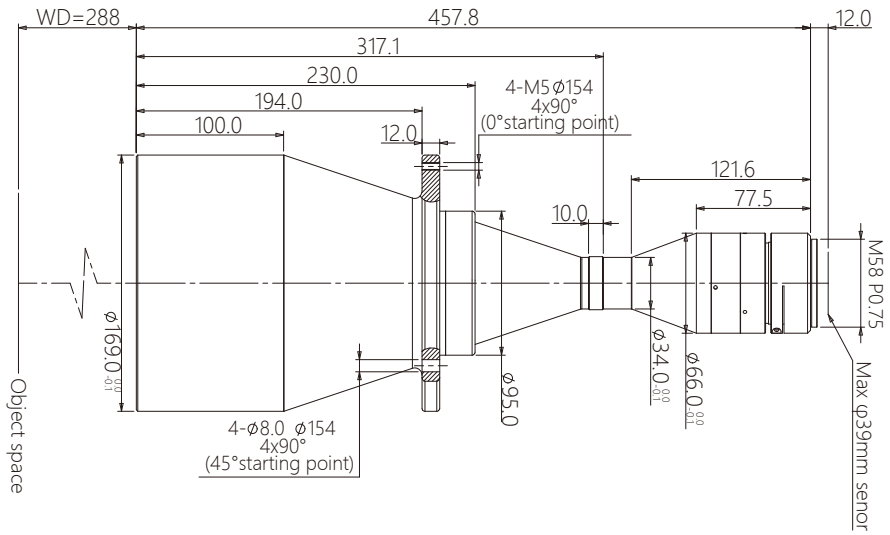
1. Depth of Field is calculated value, this value could be used for imaging test, but to get sharp image in application, half of calculated value is suggested.
2. Length of I/O = WD + Length + Back Focal Length.