COOLENS®

WWH15-110CTV2

Megapixel Telecentric Lens

- Compact design with coaxial illumination options;
- Perfect image and supports all kinds of Mega camera;
- High contrast, low distortion, high resolution;
- Optional adjustable Iris for resolution and DOF control;
- Megapixel 'object side' telecentric lens with optional long working distance versions with over 500mm working distance.

Optical Specifications	
Magnification (x)	1.5
Working Distance (mm)	110±2
Max Sensor Size (Φmm)	11.0(2/3")
Aperture (F/#)	10
Telecentricity typical (max) (deg)	<0.1
Distortion typical (max) (%)	<0.1
MTF30(lp/mm)	85
NA	0.07488
Resolution (μm)	4.5
Depth of Field (mm)	0.4

Field of View (mm × mm)	
1/2" (6.4x4.8)	4.3x3.2
1/1.8" (7.13x5.37)	4.8x3.6
2/3"(8.8x6.6)	5.9x4.4
Mechanical Specifications	
Mount	C
Length (mm)	128.9
Coaxial Light	Yes
Iris	No

Notes:
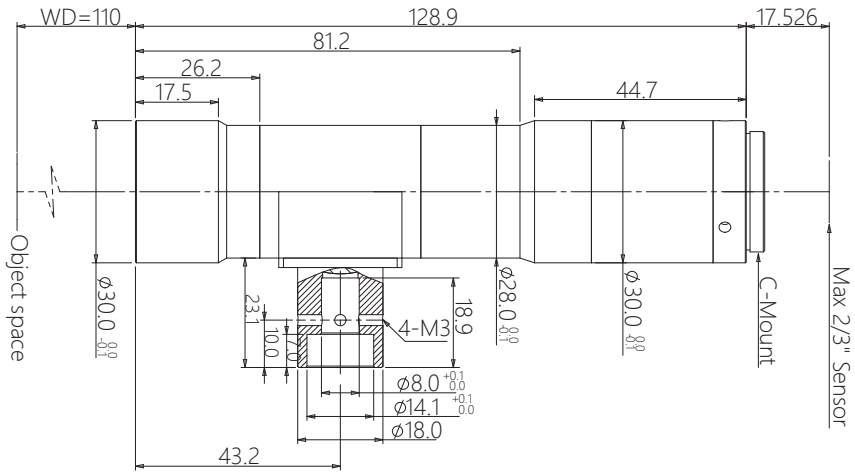
1. Depth of Field is calculated value, this value could be used for imaging test, but to get sharp image in application, half of calculated value is suggested.