COOLENS®

# WWH60-65CT

## Megapixel Telecentric Lens

- Compact design with coaxial illumination options;
- Perfect image and supports all kinds of Mega camera;
- High contrast, low distortion, high resolution;
- Optional adjustable Iris for resolution and DOF control;
- Megapixel 'object side' telecentric lens with optional long working distance versions with over 500mm working distance.

| Optical Specifications | |
|---|---|
| Magnification (x) | 6.0 |
| Working Distance (mm) | 65±1 |
| Max Sensor Size (Φmm) | 11.0(2/3") |
| Aperture (F/#) | 24.6 |
| Telecentricity typical (max) (deg) | <0.1 |
| Distortion typical (max) (%) | <0.1 |
| MTF30(lp/mm) | - |
| NA | 0.116 |
| Resolution (um) | 2.9 |
| Depth of Field (mm) | 0.1 |

| Field of View (mm × mm) | |
|---|---|
| 1/2"(6.4x4.8) | 1.1x0.8 |
| 1/1.8"(7.13x5.37) | 1.2x0.9 |
| 2/3"(8.45x7.1) | 1.4x1.2 |
| **Mechanical Specifications** | |
| Mount | C |
| Length (mm) | 120.4 |
| Coaxial Light | Yes |
| Iris | No |
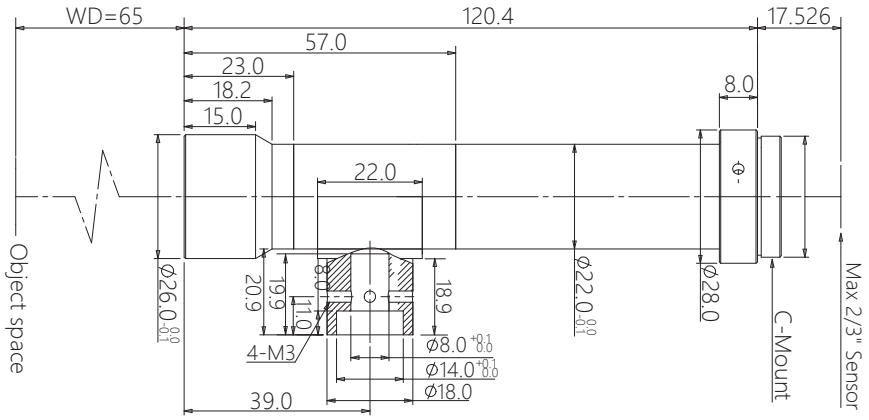
Notes:
1. Depth of Field is calculated value, this value could be used for imaging test, but to get sharp image in application, half of calculated value is suggested.