COOLENS®

WWH10-410CT

Megapixel Telecentric Lens

- Compact design with coaxial illumination options;
- Perfect image and supports all kinds of Mega camera;
- High contrast, low distortion, high resolution;
- Optional adjustable Iris for resolution and DOF control;
- Megapixel 'object side' telecentric lens with optional long working distance versions with over 500mm working distance.

Optical Specifications	
Magnification (x)	1.0
Working Distance (mm)	410±3
Max Sensor Size (Φmm)	11.0(2/3")
Aperture (F/#)	17.9
Telecentricity typical (max) (deg)	<0.1
Distortion typical (max) (%)	<0.1
MTF30(lp/mm)	37
NA	0.0273
Resolution (μm)	12.3
Depth of Field (mm)	1.4

Field of View (mm × mm)	
1/2"(6.4x4.8)	6.4x4.8
1/1.8"(7.13x5.37)	7.13x5.37
2/3"(8.8x6.6)	8.8x6.6
Mechanical Specifications	
Mount	C
Length (mm)	182.2
Coaxial Light	Yes
Iris	No
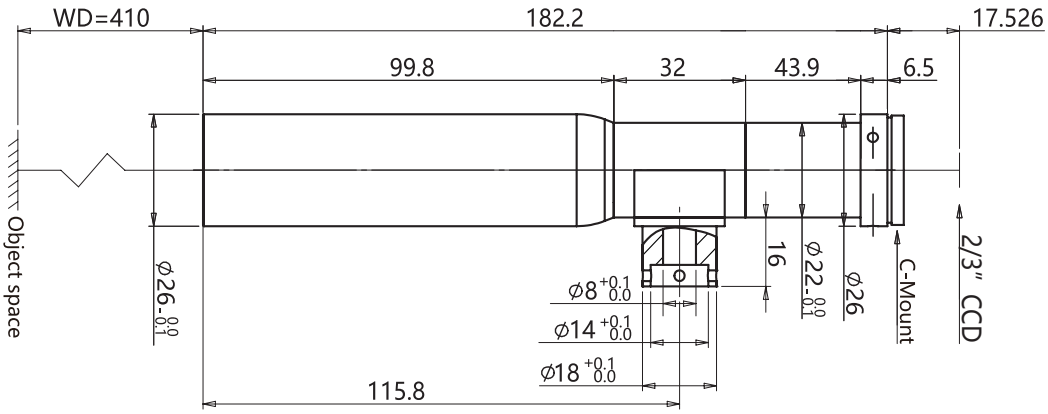
Notes:
1. Depth of Field is calculated value, this value could be used for imaging test, but to get sharp image in application, half of calculated value is suggested.